S

LILY-W1 series

Host-based Wi-Fi modules

Data sheet

Abstract

This technical data sheet describes LILY-W1 series short range Wi-Fi front end modules. These host-based modules are ultra-compact cost-efficient IEEE 802.11b/g/n Wi-Fi front end modules in the LILY form factor. This module series includes variants with or without internal antenna and LTE filter. It includes an integrated MAC/Baseband processor and RF front end components. It can connect to a host through its SDIO or USB interface.

UBX-15000203 - R10
C1-Public

www.u-blox.com

Document information

Title	**LILY-W1 series**	
Subtitle	Host-based Wi-Fi modules	
Document type	Data sheet	
Document number	UBX-15000203	
Revision and date	R10	20-May-2021
Disclosure restriction	C1-Public	

Product status	Corresponding content status	
Functional sample	Draft	For functional testing. Revised and supplementary data will be published later.
In development / Prototype	Objective specification	Target values. Revised and supplementary data will be published later.
Engineering sample	Advance information	Data based on early testing. Revised and supplementary data will be published later.
Initial production	Early production information	Data from product verification. Revised and supplementary data may be published later.
Mass production / End of life	Production information	Document contains the final product specification.

This document applies to the following products:

Product name	Type number	Firmware version	PCN reference	Product status
LILY-W131	LILY-W131-00B-00	-	-	Mass production
LILY-W131	LILY-W131-10B-00	-	-	Initial production
LILY-W132	LILY-W132-00B-00	-	-	Mass production
LILY-W132	LILY-W132-10B-00	-	-	Initial production

u-blox or third parties may hold intellectual property rights in the products, names, logos and designs included in this document. Copying, reproduction, modification or disclosure to third parties of this document or any part thereof is only permitted with the express written permission of u-blox.
The information contained herein is provided “as is” and u-blox assumes no liability for its use. No warranty, either express or implied, is given, including but not limited to, with respect to the accuracy, correctness, reliability and fitness for a particular purpose of the information. This document may be revised by u-blox at any time without notice. For the most recent documents, visit www.u-blox.com.
Copyright © u-blox AG.

Contents

Document information **2**
Contents **3**
1 Functional description **5**
1.1 Overview 5
1.2 Product features 5
1.3 Block diagram 6
1.4 Product description 6
1.5 Supported features 7
1.6 Wi-Fi performance 7
1.7 MAC addresses 8
2 Interfaces **9**
2.1 Host interfaces 9
2.1.1 USB interface 9
2.1.2 SDIO interface 9
2.2 Antenna interfaces 10
2.2.1 Internal antenna 10
2.2.2 External RF antenna interface 10
2.3 Power supply interfaces 11
2.4 Power mode interfaces 11
2.4.1 Reset 11
2.4.2 Power down 11
2.4.3 Sleep 11
3 Pin definition **12**
3.1 Pin assignment 12
4 Electrical specifications **15**
4.1 Absolute maximum ratings 15
4.1.1 Maximum ESD ratings 15
4.2 Operating conditions 15
4.2.1 Temperature range 15
4.2.2 Power supply 15
4.2.3 Power consumption 16
4.2.4 SDIO characteristics 18
4.2.5 I/O DC characteristics 18
4.2.6 USB characteristics 18
4.2.7 Wi-Fi receiver characteristics 19
4.2.8 LTE coexistence characteristics (LILY-W132 only) 20
4.2.9 Wi-Fi transmitter characteristics 21
5 Mechanical specifications **22**
5.1 Dimensions 22
5.2 Module weight 23

6 Qualification and approvals ... 24
6.1 European Union regulatory compliance ... 24
6.1.1 Compliance with the RoHS directive ... 24
6.1.2 Safety compliance ... 24
6.2 FCC and IC compliance ... 24
6.2.1 IC compliance ... 24
6.2.2 Conformité aux normes d'IC ... 24
6.2.3 FCC statement ... 25
6.2.4 Labeling requirements for end product ... 25
6.2.5 FCC and IC IDs ... 26
6.3 Japan radio equipment compliance ... 26
6.4 Taiwan compliance ... 27
6.4.1 Warning statement ... 27
6.4.2 LILY-W131 labeling requirements for end product ... 27
6.4.3 LILY-W132 labeling requirements for end product ... 27
6.5 KCC South Korea compliance ... 28
7 Antennas ... 29
7.1 Antenna accessories ... 29
7.2 Approved antennas ... 30
7.2.1 Single band antennas ... 30
7.2.2 Dual-band antennas ... 33
8 Product handling ... 34
8.1 Packaging ... 34
8.1.1 Reels ... 34
8.1.2 Tapes ... 34
8.2 Moisture sensitivity levels ... 35
8.3 Reflow soldering ... 35
8.4 ESD precautions ... 35
9 Labeling and ordering information ... 36
9.1 Product labeling ... 36
9.2 Explanation of codes ... 37
9.3 Ordering information ... 37
Appendix ... 38
A Glossary ... 38
Related documents ... 39
Revision history ... 40
Contact ... 41

1 Functional description

1.1 Overview

The LILY-W1 series modules are ultra-compact Wi-Fi front end modules including variants with or without an internal antenna and LTE filter. It is designed for integration with an LTE radio application. The LILY-W1 module, when integrated with an LTE radio application provides local area communication to Wi-Fi standards and cellular backhaul to 2G, 3G or LTE standards. LILY-W1 supports IEEE 802.11b/g/n standards. It includes an integrated MAC/Baseband processor, RF front end components and band pass filter. The LILY-W132 with internal antenna has a very sharp BAW filter specially designed for optimal LTE and Wi-Fi coexistence applications.

The modules are radio type approved for Europe (CE), the United States (FCC), Industry Canada (IC), Japan (MIC) and Taiwan (NCC). The modules are developed for reliable, high demanding industrial devices and applications and delivers high performance.

1.2 Product features

	LILY-W131	LILY-W132
Grade		
Automotive		
Professional	•	•
Standard		
Radio		
Wi-Fi IEEE 802.11 standards	b/g/n	b/g/n
Wi-Fi 2.4 / 5 [GHz]	2.4	2.4
LTE filter		•
Channel width [MHz]	20	20
Antenna type	1a	i
OS support		
Android / Linux (from u-blox)	•	•
Interfaces		
SDIO [version]	v2	v2
USB 2.0	1	1
Features		
Micro Access Point [max connects]	8	8
AES hardware support	•	•
Wi-Fi direct	•	•
Factory-assigned MAC address	•	•
Factory calibrated RF	•	•

i = Internal antenna 1a = 1 pin for external antenna

Table 1: LILY-W1 series main features summary

1.3 Block diagram

The LILY-W1 is available in the following two versions – LILY-W131 with antenna RF pin and a regular band pass filter and LILY-W132 with internal antenna and an LTE coexistence band pass filter.

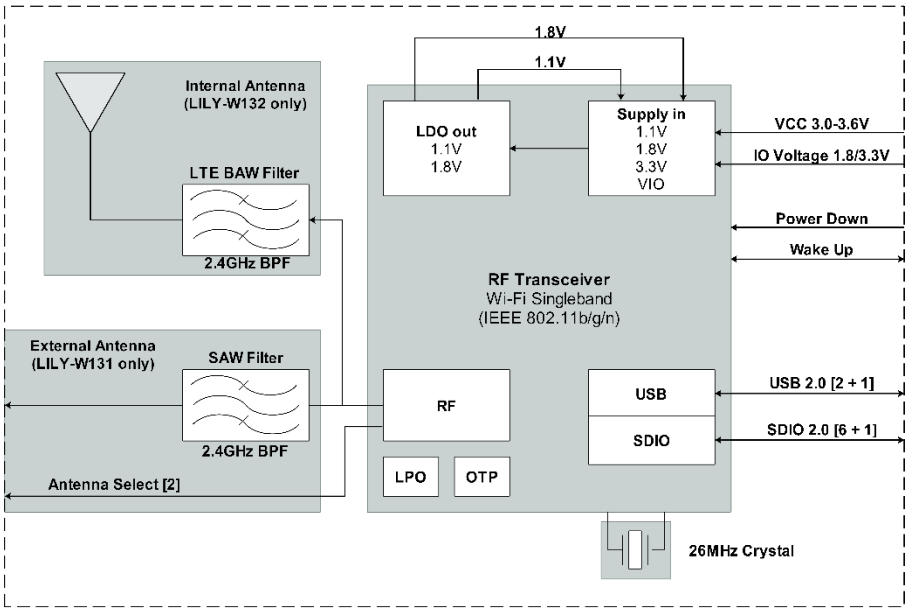

Figure 1: Block diagram of LILY-W1

1.4 Product description

The LILY-W1 series modules are ultra-compact Wi-Fi front end modules with USB and SDIO host interfaces with a module outline of only 14.0 x 10.0 mm. The module supports Wi-Fi IEEE 802.11b/g/n and is developed for reliable, high demanding industrial devices and applications, and delivers high performance. LILY-W1 includes an integrated MAC/Baseband processor and RF front end components and supports station and micro access point operation (up to 8 clients), 802.11 PHY data rates up to 72 Mbps, AES-CCMP and WAPI encryption. The module has an internal one time programmable (OTP) memory, which for example, stores radio configuration and the MAC address. The IO voltage level can be either 1.8 V or 3.3 V.

The module is available in the following two antenna versions:

- LILY-W132 with an internal PIFA antenna and an integrated LTE BAW band pass filter for optimal LTE and Wi-Fi coexistence applications.
- LILY-W131 with an antenna pin for an external antenna and a regular band pass filter. The LILY-W131 version with external antenna supports antenna diversity via control signals for an external antenna switch.

The LILY-W1 module series is specially designed to be integrated together with an LTE radio application. Their combined features provide local area communication to Wi-Fi standards and cellular backhaul to 2G, 3G or LTE standards. The LILY-W132 has an integrated LTE filter for optimal coexistence between Wi-Fi and LTE. For designs where an LTE filter is not required or implemented externally, the LILY-W131 with antenna pin is optimal.

The Wi-Fi modules are radio-type approved for Europe (CE), the United States (FCC), Industry Canada (IC), Japan (MIC) and Taiwan (NCC).

1.5 Supported features

- Wi-Fi Standards IEEE 802.11b/g/n
- Integrated high effective antenna or antenna pin
- Equipped with a LTE coexistence BAW filter (only LILY-W132)
- Extended operating temperature range of -40 °C to +85 °C
- Selectable 1.8 V or 3.3 V IO levels
- RF tuned from factory
- Contains dual MAC addresses
- Station and micro access point operation (up to 8 clients)
- 802.11 PHY data rates up to 72 Mbps
- AES-CCMP hardware encryption
- WAPI encryption supported by hardware
- High transmission power and high sensitivity
- Radio type approved for Europe
- Approval for US (FCC), Canada (IC), Japan (MIC) and Taiwan (NCC)
- Compliance with EMC standards

1.6 Wi-Fi performance

Feature	Description	
Standards	IEEE 802.11b/g/n	
Frequency bands	2.4 GHz, channel 1-13* (2.412 GHz - 2.472*)	
Channel bandwidth	20 MHz	
Data rates	802.11b	1, 2, 5.5 and 11 Mbps
	802.11g	6, 9, 12, 18, 24, 36, 48 and 54 Mbps
	802.11n	MCS0-MCS7 (max 72.2Mbps)
Hardware supported Encryptions/Decryption	AES/CCMP, AES/CMAC, WAPI, WEP/TKIP	
Maximum output power	19 dBm EIRP**	
Maximum sensitivity	-97 dBm EIRP**	
802.11n features	1-stream STBC reception Short guard interval RIFS on receive path for 802.11n packets Greenfield Tx/Rx	
Additional IEEE 802.11 support	802.11d international roaming 802.11e quality of service 802.11h transmit power control 802.11i enhanced security 802.11k radio resource measurement*** 802.11n block acknowledgment extension 802.11r fast hand-off for AP roaming*** Fully supports clients (stations) implementing IEEE Wi-Fi direct connectivity	

* Maximum, depends on the region.

** RF power including maximum antenna gain (3 dBi).

*** Supported by hardware but not supported by firmware currently.

Table 2: LILY-W1 series Wi-Fi characteristics

1.7 MAC addresses

The LILY-W1 module series has two unique consecutive MAC addresses reserved for each module, from which the first address is stored in the configuration memory during production. The first address is available in the Data Matrix on the label (see chapter 9). The second consecutive MAC address is not stored in the configuration memory but is reserved for usage with the module.

MAC address	Assignment	Example
Module1, address 1	Wi-Fi	*D4:CA:6E:90:04:90*
Module1, address 2	(free for use)	*D4:CA:6E:90:04:91*
Module2, address 1	Wi-Fi	*D4:CA:6E:90:04:92*
Module2, address 2	(free for use)	*D4:CA:6E:90:04:93*

Table 3: Example of MAC address assignment for two modules

☞ The Engineering Samples of LILY-W1 have only one reserved MAC address. This Wi-Fi MAC address is available in the Data Matrix on the label.

2 Interfaces

2.1 Host interfaces

The module has two high speed host interfaces:

- USB (default): USB 2.0 device interface with LPM support
- SDIO: SDIO 2.0 device interface

Only one interface should be used in an application and the interface is selected by the USB/SDIO-n signal.

2.1.1 USB interface

USB is the default interface; USB/SDIO-n signal has an internal pull-up and need not be connected while using the USB interface as mentioned in Pin definition section. The USB device interface is compliant with the Universal Serial Bus Specification, Revision 2.0, April 27, 2000. A USB host uses the USB cable bus and the USB 2.0 device interface to communicate with the module. Main features of the USB device interface include:

- High/full speed operation (480/12 Mbps)
- Suspend/host resume/device resume (remote wake-up)
- Built-in DMA engine that reduces interrupt loads on the embedded processor and reduces the system bus bandwidth requirement for serving the USB device operation
- Supports Link Power Management (LPM), corresponding host resume, or device resume (remote wakeup) to exit from L1 sleep state

The USB voltage levels depend on the USB speed. See Electrical specifications section for additional information.

2.1.2 SDIO interface

SDIO is activated by pulling down the USB/SDIO-n signal as mentioned in the Pin definition section. The module supports an SDIO device interface that conforms to the industry standard SDIO Full-Speed card specification.

The module acts as the device on the SDIO bus. The host unit can access registers of the SDIO interface directly and can access shared memory in the device through the use of BARs and a DMA engine. Main features of the SDIO device interface include:

- On-chip memory used for CIS
- Supports 1-bit and 4-bit SDIO transfer modes at the full clock range of 0 to 50 MHz
- Special interrupt register for information exchange
- Allows card to interrupt host

SDIO 2.0 device interface (1-bit SDIO, 4-bit SDIO transfer modes at full clock range up to 50 MHz). All mandatory SDIO commands are supported.

In 4-bit SDIO mode, data is transferred on all 4 data pins (SDIO_D[3:0]), and the interrupt pin is not available for exclusive use as it is utilized as a data transfer line. Thus, if the interrupt function is required, a special timing is required to provide interrupts. The 4-bit SDIO mode provides the highest data transfer possible, up to 100 Mbps.

The required pull up for SD interface on SD_CMD, SD_D [3:0] should be provided by the host. The pull up value is between 10 k to 100k Ω according to the SDIO v2.0 specifications. 33 Ω inline resistors may be needed to help with signal integrity. The SDIO signals levels are selectable according to the VCC_IO 1.8/3.3 voltage levels as mentioned in the Power supply interfaces section.

See LILY-W1 series System Integration Manual [2] for more information about SDIO design.

2.2 Antenna interfaces

The LILY-W1 series supports either an internal antenna (LILY-W132) or external antennas connected through an antenna pin (LILY-W131).

2.2.1 Internal antenna

The LILY-W132 has an internal (embedded) 2.4 GHz PIFA antenna. The internal antenna is a PIFA antenna specifically designed and optimized for the LILY form factor.

Keep a minimum clearance of 5 mm between the antenna and the casing. Keep a minimum of 10 mm free space from the metal around the antenna including the area below. If a metal enclosure is required, use LILY-W131 and an external antenna.

It is recommended to place the LILY-W132 module so that the internal antenna is in the corner of the host PCB (the corner closest to Pin 11 should be in the corner). The antenna side (short side closest to the antenna), positioned along one side of the host PCB ground plane is the second-best option. It is beneficial to have a large solid ground plane on the host PCB and have a good grounding on the LILY-W132 module. Minimum ground plane size is 24x30 mm but recommended is more than 50x50 mm.

The LILY-W132 module has an integrated LTE BAW band pass filter for optimal LTE and Wi-Fi coexistence applications.

See LILY-W1 series system integration manual [2] for more information about antenna related design.

⚠ The ANT signal is not available on the solder pins of the LILY-W132 module, and no antenna diversity functionality is available.

2.2.2 External RF antenna interface

The LILY-W131 module has an antenna signal (ANT) pin with a characteristic impedance of 50 Ω for using an external antenna. The antenna signal supports both Tx and Rx.

The external antenna, for example, can be an SMD antenna (or PCB integrated antenna) on the host board. An antenna connector for using an external antenna via a coaxial cable could also be implemented. A cable antenna might be necessary to use if the module is mounted in a shielded enclosure such as a metal box or cabinet.

An external antenna connector (U.FL. connector) reference design (see LILY-W1 series system integration manual [2]) is available and must be followed to comply with the LILY-W1 FCC/IC modular approvals.

See the list of approved antennas (section 7.2) for additional information.

The LILY-W131 module also supports an antenna diversity solution with an external antenna switch (see Figure 2). The switch is controlled by the ANT_SEL and the inverse ANT_SEL-n control signals are controlled from LILY-W131. See LILY-W1 series system integration manual [2] for more information about antenna switch design.

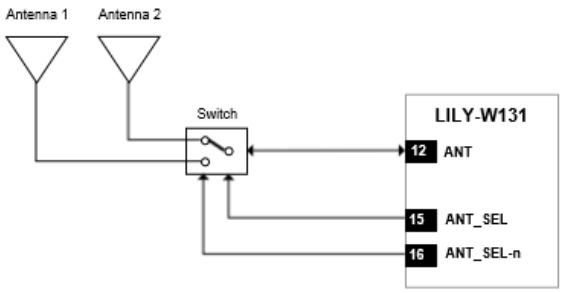

Figure 2: LILY-W131 antenna diversity solution with an external antenna switch controlled by LILY-W131

The LILY-W131 can be used in coexistence with an LTE modem. An external additional LTE band pass filter may be required depending on the location of the antennas. Refer to LILY-W1 series system integration manual [2] for a list of suitable LTE filters.

⚠ The FCC/IC modular approvals are not including an additional LTE filter or an antenna switch design.

2.3 Power supply interfaces

The power for LILY-W1 series modules is supplied through VCC and VCC_IO pins by DC voltage.

☞ The system power supply circuit must be able to support peak power (add 20% as margin over the typical listed current consumption), as during operation, the current drawn from VCC and VCC_IO can vary significantly based on the power consumption profile of the Wi-Fi technology.

The separate VCC_IO pin enables integration of the module in either a 1.8 V or 3.3 V application without any level converters. The module performs calibration when the device is powered up.

2.4 Power mode interfaces

The LILY-W1 series modules support external power management control through the Power Down (PD-n), Host wake up (HOST_WKUP) and the Wake up (WAKE_UP) signals.

2.4.1 Reset

The module is reset to its default operating state under the following conditions:

- Internal reset: The module is reset, and the internal CPU starts the boot sequence when the following internal reset events occur:
    - Power-on reset (POR): Device receives power supplies rise (triggers internal POR circuit)
    - Software/Firmware reset: Host driver issues a soft reset
- External pin assertion (PD-n): The module is reset, and the internal CPU begins the boot sequence when the PD-n input pin transitions from low to high following the power-up sequence. See Power down section for more information.

2.4.2 Power down

For applications that do not use Wi-Fi, the device can be put into a low-leakage mode of operation using the one of the following methods:

- Using PD-n pin: The power-down state provides the lowest leakage mode of operation. Assert PD-n low to enter power-down. This must be met to enter a power-down state.
- All rails powered off: Alternatively, VCC and VCC_IO can be powered off. In this case, the state of the PD-n pin is irrelevant.

During power-up the PD-n signal should be low or following the VCC signal.

2.4.3 Sleep

The module Power Save Mode (PSM) implementation is achieved through the coordination of the driver, firmware, and hardware signals HOST_WKUP and WAKE_UP. See LILY-W1 series system integration manual [2] for more information.

3 Pin definition

3.1 Pin assignment

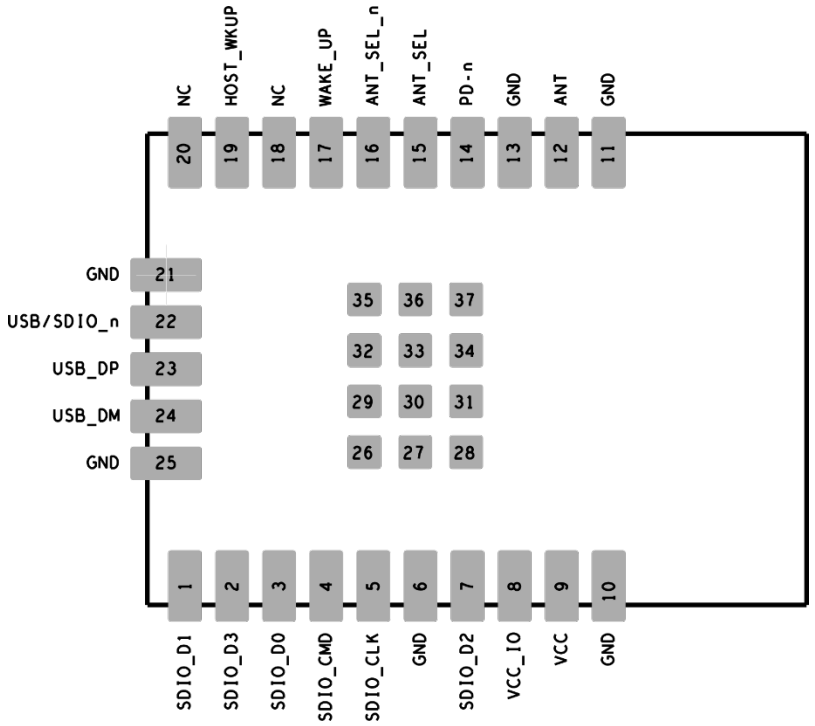

Figure 3: LILY-W1 series pin assignment (top view)

☞ The signals are available on castellation pins on the edge of the PCB. The ANT signals are not available on the LILY-W132 module with internal antenna. The GND pins, 26-37 are located on the bottom of the module.

No.	Name	Voltage level	I/O	Description	Remarks
1	SDIO_D1	VCC_IO	I/O	SDIO 4-bit Mode: Data line Bit[1] SDIO 1-bit Mode: Interrupt SDIO SPI Mode: Interrupt	
2	SDIO_D3	VCC_IO	I/O	SDIO 4-bit Mode: Data line Bit[3] SDIO 1-bit Mode: Reserved SDIO SPI Mode: Card select (active low)	
3	SDIO_D0	VCC_IO	I/O	SDIO 4-bit Mode: Data line Bit[0] SDIO 1-bit Mode: Data line SDIO SPI Mode: Data output	
4	SDIO_CMD/ USB_VBUS_ON	VCC_IO	I/O	SDIO 4-bit Mode: Command/response (input/output) SDIO 1-bit Mode: Command line SDIO SPI Mode: Data input USB Mode: USB_VBUS_ON (input)	Pin is also used by USB as USB_VBUS_ON: USB VBus On, USB power valid indication.
5	SDIO_CLK	VCC_IO	I	SDIO 4-bit Mode: Clock input SDIO 1-bit Mode: Clock input SDIO SPI Mode: Clock input	
6	GND	GND	N/A	Ground	
7	SDIO_D2	VCC_IO	I/O	SDIO 4-bit Mode: Data line Bit[2] or read wait (optional) SDIO 1-bit Mode: Read wait (optional) SDIO SPI Mode: Reserved	
8	VCC_IO	VCC_IO	I	IO voltage supply, 1.8 or 3.3 V	
9	VCC	VCC	I	Module main voltage supply 3.0 - 3.6 V	
10	GND	GND	N/A	Ground	
11	GND	GND	N/A	Ground	
12	ANT	RF	I/O	Antenna signal	Only available on LILY-W131
13	GND	GND	N/A	Ground	
14	PD-n	VCC (3.3 V)	I	Power down, active low	Internal pull-up. Notice 3.3 V pin.
15	ANT_SEL	VCC (3.3 V)	O	External antenna selection signal for antenna diversity if two antennas are used.	Only available on LILY-W131. Inverted version of ANT_SEL-n. Notice 3.3 V pin.
16	ANT_SEL-n	VCC (3.3 V)	O	External Inverted antenna selection signal for antenna diversity if two antennas are used.	Only available on LILY-W131. Inverted version of ANT_SEL. Notice 3.3 V pin.
17	WAKE_UP	1.8 V	I	Wake up input signal. Active high	Programmable pull-up or pull-down. Notice 1.8 V pin.
18	Reserved	-	-	Reserved	Do not connect.
19	HOST_WKUP	VCC_IO	O	Output wake up signal to host.	
20	Reserved	-	-	Reserved	Do not connect.
21	GND	GND	N/A	Ground	
22	USB/SDIO-n	1.8 V	I	Select host interface.	Low level activates the SDIO interface. High level activates the USB interface. Internal pull-up (USB is default). Notice 1.8 V pin.

No.	Name	Voltage level	I/O	Description	Remarks
23	USB_DP	V_USB	I/O	USB Serial Differential Data Positive.	The USB voltage levels depends on the USB speed, see the USB interface and the Electrical specifications sections.
24	USB_DM	V_USB	I/O	USB Serial Differential Data Negative.	The USB voltage levels depends on the USB speed, see the USB interface and the Electrical specifications sections.
25	GND	GND	N/A	Ground	
26-37	GND	GND	N/A	Ground	

Table 4: LILY-W1 series pin description

4 Electrical specifications

⚠ Stressing the device above one or more of the ratings listed in the Absolute maximum rating section may cause permanent damage. These are stress ratings only. Operating the module at these or at any conditions other than those specified in the Operating conditions section of this document should be avoided. Exposure to absolute maximum rating conditions for extended periods may affect device reliability.

☞ Operating condition ranges define those limits within which the functionality of the device is guaranteed. Where application information is given, it is advisory only and does not form part of the specification.

4.1 Absolute maximum ratings

Symbol	Description	Condition		Min	Max	Unit
VCC	Module supply voltage	Input DC voltage at VCC pin		-	4.0	V
VCC_IO	IO voltage supply	Input DC voltage at VCC_IO pin	1.8 V mode	-	2.2	V
			3.3 V mode		4.0	V

Table 5: Absolute maximum ratings

4.1.1 Maximum ESD ratings

Applicability		Immunity level	Unit
All pins except **ANT**	Human Body Model (HBM), ANSA/ESDA/JEDEC JS-001-2014.	±2000	V
	Charged Device Model (CDM), JESD22-C101.	±500	V
ANT pin and Internal antenna	Human Body Model (HBM), ANSA/ESDA/JEDEC JS-001-2014.	±300	V
	Charged Device Model (CDM), JESD22-C101.	±600	V

Table 6: Maximum ESD ratings

4.2 Operating conditions

4.2.1 Temperature range

Parameter	Minimum	Maximum	Unit
Storage temperature	-40	+85	°C
Operating temperature	-40	+85	°C

Table 7: Temperature range

4.2.2 Power supply

⚠ Read the safety notes in section Guidelines for Efficient and Safe Use before using the modules.

Symbol	Parameter		Min.	Typ.	Max.	Unit
VCC	Supply voltage		3.00	3.30	3.60	V
VCC_IO	Digital IO supply voltage	1.8 V mode	1.62	1.80	1.98	V
		3.3 V mode	3.00	3.30	3.60	V

Table 8: Power supply voltage

4.2.3 Power consumption

4.2.3.1 SDIO mode

I_{VCC} (VCC = 3.3 V, VCC_IO = 3.3 V, T_{amb} = 25 °C)

Mode	State		Power*	Typ**	Max**	Unit
Sleep	Not associated			0.09		mA
Power Save	Associated DTIM = 1			1.5	80	mA
	Associated DTIM = 3			0.57	80	mA
	Associated DTIM = 5			0.33	80	mA
Connected Receive Ch-6 (2437 MHz)	802.11b	Data Rate = 1 Mbit/s		70		mA
		Data Rate = 11 Mbit/s		72		mA
	802.11g	Rate = 6 Mbit/s		71		mA
		Rate = 54 Mbit/s		73		mA
	802.11n	MCS0		70		mA
		MCS7		73		mA
Connected Transmit Ch-6 (2437 MHz)	802.11b	Data Rate = 1 Mbit/s	7 dBm	260		mA
			14 dBm	295		mA
			16 dBm	320		mA
		Data Rate = 11 Mbit/s	7 dBm	260		mA
			14 dBm	295		mA
			16 dBm	325		mA
	802.11g	Data Rate = 6 Mbit/s	7 dBm	260		mA
			14 dBm	300		mA
			16 dBm	335		mA
		Data Rate = 54 Mbit/s	7 dBm	265		mA
			14 dBm	305		mA
			16 dBm	335		mA
	802.11n	MCS0	7 dBm	260		mA
			14 dBm	300		mA
			16 dBm	335		mA
		MCS7	7 dBm	265		mA
			14 dBm	315		mA
			16 dBm	335		mA

* Conducted output power setting not including antenna gain.

** I_{VCC_IO} is not included. I_{VCC_IO} depends on the application design but a typ value is 1.5mA.

Table 9: Power consumption in SDIO mode

4.2.3.2 USB mode

I_{VCC} (VCC = 3.3 V, VCC_IO = 3.3 V, T_{amb} = 25 °C)

Mode	State / Modulation	Data Rate	Power setting*	Typ**	Max**	Unit
Sleep* **	Not associated			0.26		mA
Power Save* **	Associated DTIM = 1			1.9	85	mA
	Associated DTIM = 3			0.85	85	mA
	Associated DTIM = 5			0.66	85	mA
Connected Receive Ch-6 (2437 MHz)	802.11b	Data Rate = 1 Mbit/s		84		mA
		Data Rate = 11 Mbit/s		84		mA
	802.11g	Rate = 6 Mbit/s		82		mA
		Rate = 54 Mbit/s		84		mA
	802.11n	MCS0		82		mA
		MCS7		84		mA
Connected Transmit Ch-6 (2437 MHz)	802.11b	1 Mbit/s	7 dBm	270		mA
			14 dBm	305		mA
			16 dBm	335		mA
		11 Mbit/s	7 dBm	270		mA
			14 dBm	305		mA
			16 dBm	335		mA
	802.11g	6 Mbit/s	7 dBm	270		mA
			14 dBm	320		mA
			16 dBm	340		mA
		54 Mbit/s	7 dBm	280		mA
			14 dBm	320		mA
			16 dBm	340		mA
	802.11n	MCS0	7 dBm	270		mA
			14 dBm	320		mA
			16 dBm	340		mA
		MCS7	7 dBm	275		mA
			14 dBm	320		mA
			16 dBm	340		mA

* Conducted output power setting not including antenna gain.

** I_{VCC_IO} is not included. I_{VCC_IO} depends on the application design but a typ value is 1.5mA.

*** USB suspend mode.

Table 10: Power consumption in USB mode

4.2.4 SDIO characteristics

The SDIO signals are supplied with the VCC_IO pin and you can select either 1.8 V or 3.3 V.

(VCC = 3.3 V, T_{amb} = 25 °C)

Signals	Symbol	Parameter	Min	Typ.	Max	Unit
VCC_IO levels SDIO_D[0..3], SDIO_CMD, SDIO_CLK,	V_{IL}	LOW level input voltage	-0.4	-	0.3*VCC_IO	V
	V_{IH}	HIGH level input voltage	0.7*VCC_IO	-	VCC_IO+0.4	V
	V_{OL}	LOW level output voltage	-	-	0.4	V
	V_{OH}	HIGH level output voltage	VCC_IO-0.4	-	-	V
	V_{HYS}	Input hysteresis	100	-	-	mV
Clock frequency	f_{NS}	Clock frequency normal speed	-	-	25	MHz
	f_{HS}	Clock frequency high speed	-	-	50	MHz

Table 11: SDIO characteristics

4.2.5 I/O DC characteristics

The HOST_WKUP and CLK_REQ signals are supplied with the VCC_IO pin and you can select either 1.8 V or 3.3 V. (VCC = 3.3 V, T_{amb} = 25 °C)

Signals	Symbol	Description	Min	Typ	Max	Unit
VCC_IO levels HOST_WKUP, CLK_REQ	V_{IL}	LOW level input voltage	-0.4	-	0.3*VCC_IO	v
	V_{IH}	HIGH level input voltage	0.7*VCC_IO	-	VCC_IO+0.4	
	V_{OL}	LOW level output voltage	-	-	0.4	
	V_{OH}	HIGH level output voltage	VCC_IO-0.4	-	-	
3.3 V input PD-n	$V_{3.3VIL}$	3.3 V LOW level input voltage	-0.4	-	0.3*VCC	V
	$V_{3.3VIH}$	3.3 V HIGH level input voltage	0.7*VCC	-	VCC+0.4	V
	R_{PD-n}	PD-n internal PU	-	47	-	kΩ
3.3 V output ANT_SEL, ANT_SEL-n	$V_{3.3VOL}$	3.3 V LOW level output voltage	-	-	0.4	V
	$V_{3.3VOH}$	3.3 V HIGH level output voltage	VCC-0.4	-	-	V
1.8 V input WAKE_UP, USB/SDIO-n	$V_{1.8VIL}$	1.8 V LOW level input voltage	-0.4	-	0.4	V
	$V_{1.8VIL}$	1.8 V HIGH level input voltage	1.4	-	2.0	V
	V_{HYS}	Input hysteresis	100	-	-	mV

Table 12: I/O signals DC characteristics

4.2.6 USB characteristics

(VCC = 3.3 V, T_{amb} = 25 °C)

Signals	Symbol	Parameter	Min	Typ	Max	Unit
USB power valid indication USB_VBUS_ON	V_{VBUSIL}	USB_VBUS_ON LOW level input voltage	-0.4	-	0.3*VCC_IO	
	V_{VBUSIH}	USB_VBUS_ON HIGH level input voltage	0.7*VCC_IO	-	VCC_IO+0.4	
Input levels for Low/Full Speed USB_DP/USB_DM	V_{IL}	LOW level input voltage	-	-	0.8	V
	V_{IH}	HIGH level input voltage (driven)	2.0	-	-	V
	V_{IHZ}	HIGH level voltage (floating)	2.7	-	3.6	V
	V_{CM}	Differential common mode range	0.8	-	2.5	V
Output levels for Low/Full Speed USB_DP/USB_DM	V_{OL}	LOW level output voltage	0	-	0.3	V
	V_{OH}	HIGH level output voltage (driven)	2.8	-	3.6	V
	V_{CRS}	Output signal crossover voltage	1.3	-	2.0	V
Input Levels for High Speed USB_DP/USB_DM	V_{HSSQ}	High-speed squelch detection threshold (differential signal amplitude)	100	-	150	mV
	V_{HSDSC}	High-speed disconnect detection threshold (differential signal amplitude)	525	-	625	mV
	V_{HSCM}	High-speed data signaling common mode voltage range	-50	-	500	mV
Output Levels for High Speed USB_DP/USB_DM	V_{HSOI}	High-speed idle level	-10	-	10	mV
	V_{HSOH}	High-speed data signaling high	360	-	440	mV
	V_{HSOL}	High-speed data signaling low	-10	-	10	mV
	V_{CHIRPJ}	Chirp J level (differential voltage)	700	-	1100	mV
	V_{CHIRPK}	Chirp K level (differential voltage)	-900	-	-500	mV
Data rate	T_{FSDRAT}	Full speed data rate	-	12	-	Mb/s
	T_{HSDRAT}	High speed data rate	-	480	-	Mb/s

Table 13: USB characteristics

4.2.7 Wi-Fi receiver characteristics

Conducted RF receiving sensitivity is measured on the U.FL connector on the evaluation board of the EVK-LILY-W131 [3] (connected to antenna pin ANT of LILY-W131).

(V_{CC} = 3.3 V, V_{VCC_IO} = 3.3 V, T_{amb} = 25 °C).

Parameter	Modulation	IEEE limit	Typ	Unit
Receive sensitivity	802.11b, Rate = 1 Mbit, PER ≤ 8%	-76	-94	dBm
	802.11b, Rate = 11 Mbit, PER ≤ 8%	-76	-85	dBm
	802.11g, Rate = 6 Mbit, PER ≤ 10%	-82	-87	dBm
	802.11g, Rate = 54 Mbit, PER ≤ 10%	-65	-70	dBm
	802.11n, Rate = 6.5 Mbit, PER ≤ 10%	-82	-86	dBm
	802.11n, Rate = 65 Mbit, PER ≤ 10%	-64	-67	dBm

Table 14: Wi-Fi receiver characteristics

4.2.8 LTE coexistence characteristics (LILY-W132 only)

Degradation of sensitivity when coexisting with an LTE device that transmits 24 dBm output power.

(V_{CC} = 3.3 V, V_{VCC_IO} = 3.3 V, T_{amb} = 25 °C).

				LTE device band 7, 24 dBm			
Parameter	**Modulation**	**Attenuation between LILY-W132/LTE device**	**LILY-W132 Channel**	**EARFCN 20750**	**EARFCN 21100**	**EARFCN 21449**	**Unit**
Receive sensitivity degradation	802.11b, Rate = 1 Mbit, PER ≤ 8%	10 dB	1/6/11	0	0	0	dB
	802.11b, Rate = 11 Mbit, PER ≤ 8%			0	0	0	dB
	802.11g, Rate = 6 Mbit, PER ≤ 10%			0	0	0	dB
	802.11g, Rate = 54 Mbit, PER ≤ 10%			0	0	0	dB
	802.11n, Rate = 6.5 Mbit, PER ≤ 10%			0	0	0	dB
	802.11n, Rate = 65 Mbit, PER ≤ 10%			0	0	0	dB
	802.11b, Rate = 1 Mbit, PER ≤ 8%		13	24	5	6	dB
	802.11b, Rate = 11 Mbit, PER ≤ 8%			26	6	7	dB
	802.11g, Rate = 6 Mbit, PER ≤ 10%			27	9	10	dB
	802.11g, Rate = 54 Mbit, PER ≤ 10%			25	9	11	dB
	802.11n, Rate = 6.5 Mbit, PER ≤ 10%			27	9	11	dB
	802.11n, Rate = 65 Mbit, PER ≤ 10%			24	9	10	dB
	802.11b, Rate = 1 Mbit, PER ≤ 8%	30 dB	13	1	0	0	dB
	802.11b, Rate = 11 Mbit, PER ≤ 8%			4	0	0	dB
	802.11g, Rate = 6 Mbit, PER ≤ 10%			4	0	0	dB
	802.11g, Rate = 54 Mbit, PER ≤ 10%			4	1	1	dB
	802.11n, Rate = 6.5 Mbit, PER ≤ 10%			6	1	1	dB
	802.11n, Rate = 65 Mbit, PER ≤ 10%			4	0	0	dB

Table 15: LILY-W132 receive sensitivity degradation with LTE coexistence

4.2.9 Wi-Fi transmitter characteristics

Conducted RF transmit characteristics is measured on the U.FL connector on the evaluation board of the EVK-LILY-W131 [3] (connected to antenna pin ANT of LILY-W131).

(V_{CC} = 3.3 V, V_{VCC_IO} = 3.3 V, T_{amb} = 25 °C).

Parameter	Modulation	Data Rate	Power setting [dBm]	EVM [+%/-dB]	Typ*	Unit
Transmit output power	802.11b	Data Rate = 1 Mbit/s IEEE EVM limit = 35%	7	7	7.2	dBm
			13	7	12.8	dBm
			14	7	14.3	dBm
			16	7	15.9	dBm
		Data Rate = 11 Mbit/s IEEE EVM limit = 35%	7	4	7.3	dBm
			13	4	12.7	dBm
			14	4	13.8	dBm
			16	4	15.6	dBm
	802.11g	Data Rate = 6 Mbit/s IEEE EVM limit = -5dB	7	-28	7.1	dBm
			13	-25	12.7	dBm
			16	-21	15.7	dBm
		Data Rate = 54 Mbit/s IEEE EVM limit = -25dB	7	-35	7.2	dBm
			13	-31	12.7	dBm
			16	-28	15.7	dBm
	802.11n	MCS0 IEEE EVM limit = -5dB	7	-28	7.3	dBm
			13	-24	12.8	dBm
			16	-20	15.7	dBm
		MCS7 IEEE EVM limit = -28dB	7	-34	7.2	dBm
			13	-32	12.9	dBm
			16	-29	15.8	dBm

* Measurement tolerance +1.5/-3.5 dB. Regional power limitation can reduce the maximum output power (especially on channels close to band edges).

Table 16: Wi-Fi transmitter characteristics

5 Mechanical specifications

5.1 Dimensions

The dimensions for LILY-W131 and LILY-W132 are the same except the antenna on LILY-W132.

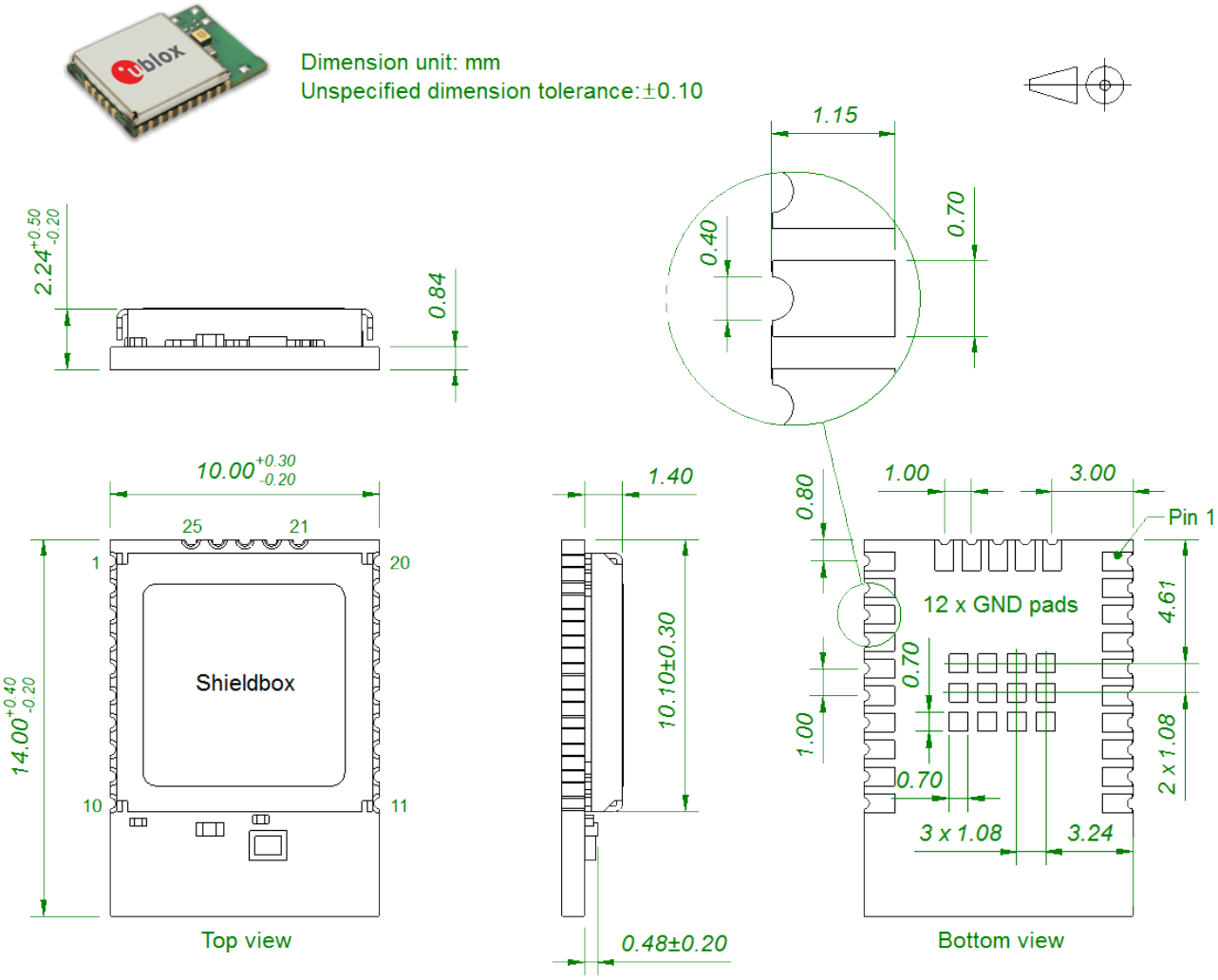

Figure 4: LILY-W131 dimensions

☞ The 12 GND pins in the middle of the bottom side of module are not in the center of the module.

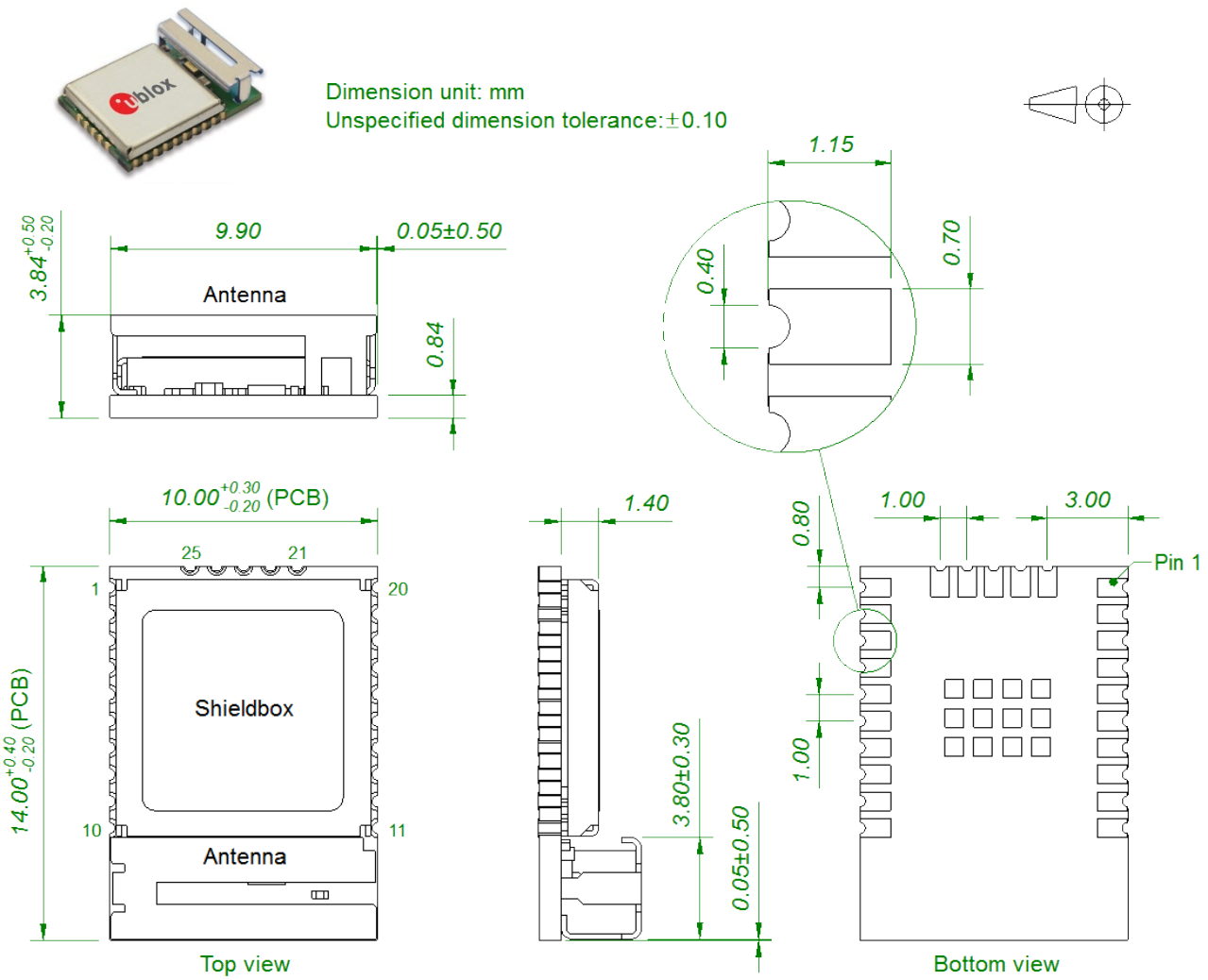

Figure 5: LILY-W132 dimensions

☞ The 12 GND pins in the middle of the bottom side of module are not in the center of the module.

5.2 Module weight

Module	Typ	Unit
LILY-W131	<1	g
LILY-W132	<1	g

Table 17: Module weight

6 Qualification and approvals

6.1 European Union regulatory compliance

Information about regulatory compliance of the European Union for LILY-W1 module is available in the LILY-W1Declaration of Conformity [4].

6.1.1 Compliance with the RoHS directive

The LILY-W1 series modules complies with the Directive 2011/65/EU (EU RoHS 2) and its amendment Directive (EU) 2015/863 (EU RoHS 3).

6.1.2 Safety compliance

In order to fulfill the safety standard EN 60950-1, the unit must be supplied by a limited power source.

6.2 FCC and IC compliance

6.2.1 IC compliance

This device complies with Industry Canada license-exempt RSS standard(s).
Operation is subject to the following two conditions:

1. This device may not cause interference, and
2. This device must accept any interference, including interference that may cause undesired operation of the device.

Under Industry Canada regulations, this radio transmitter may only operate using an antenna of a type and maximum (or lesser) gain approved for the transmitter by Industry Canada. To reduce potential radio interference to other users, the antenna type and its gain should be chosen in such a way that the equivalent isotropically radiated power (e.i.r.p.) is not more than that is necessary for successful communication.

This equipment complies with IC RSS-102 radiation exposure limits set forth for an uncontrolled environment. This equipment should be installed and operated with a minimum distance of 20 cm between the radiator and your body.

6.2.2 Conformité aux normes d'IC

Cet appareil est conforme à la(aux) norme(s) RSS sans licence d'Industry Canada.

Son utilisation est soumise aux deux conditions suivantes :

1. Cet appareil ne doit pas causer d'interférences et
2. il doit accepter toutes interférences reçues, y compris celles susceptibles d'avoir des effets indésirables sur son fonctionnement.

Conformément aux réglementations d'Industry Canada, cet émetteur radio ne peut fonctionner qu'à l'aide d'une antenne dont le type et le gain maximal (ou minimal) ont été approuvés pour cet émetteur par Industry Canada. Pour réduire le risque d'interférences avec d'autres utilisateurs, il faut choisir le type d'antenne et son gain de telle sorte que la puissance isotrope rayonnée équivalente (p.i.r.e) ne soit pas supérieure à celle requise pour obtenir une communication satisfaisante.

Cet équipement respecte les limites d'exposition aux rayonnements IC RSS-102 définies pour un environnement non contrôlé. Il doit être installé et utilisé en maintenant une distance minimum de 20 cm entre le radiateur et votre corps.

6.2.3 FCC statement

This device complies with Part 15 of the FCC Rules. Operation is subject to the following two conditions:

1. This device may not cause harmful interference, and
2. This device must accept any interference received, including interference that may cause undesired operation.

☞ This equipment has been tested and found to comply with the limits for a Class B digital device, pursuant to Part 15 of the FCC Rules. These limits are designed to provide reasonable protection against harmful interference in a residential installation. This equipment generates, uses and can radiate radio frequency energy and, if not installed and used in accordance with the instructions, may cause harmful interference to radio communications. However, there is no guarantee that the interference will not occur in a particular installation. If this equipment does cause harmful interference to radio or television reception, which can be determined by turning the equipment off and on, the user is encouraged to try to correct the interference by one or more of the following measures:

- Reorient or relocate the receiving antenna
- Increase the separation between the equipment and receiver
- Connect the equipment into an outlet on a circuit different from that to which the receiver is connected.

Consult the dealer or an experienced radio/TV technician for help.

The LILY-W1 module is for OEM integrations only. The end-user product will be professionally installed in such a manner that only the authorized antennas are used.

For LILY-W131 is an external antenna connector (U.FL. connector) reference design (see LILY-W1 series System Integration Manual [2]) available and must be followed to comply with the LILY-W1 FCC/IC modular approval.

Any changes or modifications NOT explicitly APPROVED by u-blox could cause the module to cease to comply with FCC rules part 15, and thus void the user's authority to operate the equipment.

6.2.3.1 Cautions

⚠ Any changes or modifications could cause the module to cease to comply with FCC rules part 15 and thus void the user's authority to operate the equipment.

⚠ §15.407 statement; in case of absence of information to transmit or operational failure, the LILY-W1 module will automatically discontinue transmission.

6.2.4 Labeling requirements for end product

For an end product using the LILY-W1 modules there must be a label containing, at least, the following information:

This device contains FCC ID: XPYLILYW1 IC: 8595A-LILYW1

The label must be affixed on an exterior surface of the end product such that it will be visible upon inspection in compliance with the modular approval guidelines developed by the FCC.

In accordance with 47 CFR § 15.19, the end product shall bear the following statement in a conspicuous location on the device:

"This device complies with Part 15 of the FCC Rules.
Operation is subject to the following two conditions;
(1) This device may not cause harmful interference, and

(2) This device must accept any interference received, including interference that may cause undesired operation."

When the device is so small or for such use that it is not practicable to place the statement above on it, the information shall be placed in a prominent location in the instruction manual or pamphlet supplied to the user or, alternatively, shall be placed on the container in which the device is marketed.

In case, where the final product will be installed in locations where the end-user is not able to see the FCC ID and/or this statement, the FCC ID and the statement shall also be included in the end-product manual.

6.2.5 FCC and IC IDs

Model	FCC ID	IC ID
LILY-W131	XPYLILYW1	8595A-LILYW1
LILY-W132	XPYLILYW1	8595A-LILYW1

Table 18: FCC and IC IDs for different models of the LILY-W1 series

6.3 Japan radio equipment compliance

The LILY-W1 module complies with the Japanese Technical Regulation Conformity Certification of Specified Radio Equipment (ordinance of MPT N°. 37, 1981), Article 2, Paragraph 1:

- Item 19 "2.4 GHz band wide band low power data communication system"

☞ The LILY-W1 MIC certification number is 204-610007.

☞ The very small size of the module makes it not reasonable to fit the GITEKI mark and certification number onto the module label. Instead the Giteki mark and certification number is available in this Datasheet, LILY-W1 series System Integration Manual [2] and on the LILY-W1 package.

When a product integrated with a LILY-W1 module is placed on the Japanese market, it must have a label affixed on an exterior surface. The label must contain all the information presented in Figure 6. The English translation of the Japanese text displayed below the Giteki mark is - “This equipment contains specified radio equipment that has been certified to the Technical Regulation Conformity Certification under the Radio Law.“ The marking must be visible for inspection.

R **204-610007**

当該機器には電波法に基づく、技術基準適合証明等を受けた特定無線
設備を装着している。

Figure 6: Giteki mark, R and the LILY-W1 MIC certification number.

The recommended size of the Giteki mark is Ø5.0 mm but the minimum size is Ø3.0 mm.

☞ Only the antennas listed in section 7.2 and approved for MIC are allowed to be used together with this MIC certificate.

The end product holder shall also include a copy of the Japan Radio Certificate to the end product technical documentation. See the Contact information in the end of this document to request a copy of the Radio Certificate.

6.4 Taiwan compliance

6.4.1 Warning statement

- 經型式認證合格之低功率射頻電機，非經許可，公司、商號或使用者均不得擅自變更頻率、 加大功率或變更原設計之特性及功能。
- 低功率射頻電機之使用不得影響飛航安全及干擾合法通信；經發現有干擾現象時，應立即停用，並改善至無干擾時方得繼續使用。前項合法通信，指依電信法規定作業之無線電通信。低功率射頻電機須忍受合法通信或工業、科學及醫療用電波輻射性電機設備之干擾。

Statement translation:

- Without permission granted by the NCC, any company, enterprise, or user is not allowed to change frequency, enhance transmitting power or alter original characteristic as well as performance to an approved low power radio-frequency devices.
- The low power radio-frequency devices shall not influence aircraft security and interfere legal communications; If found, the user shall cease operating immediately until no interference is achieved. The said legal communications means radio communications is operated in compliance with the Telecommunications Act. The low power radio-frequency devices must be susceptible with the interference from legal communications or ISM radio wave radiated devices.

6.4.2 LILY-W131 labeling requirements for end product

When a product integrated with a LILY-W131 module is placed on the Taiwan market, the product must be affixed with a label marking as shown below. The label can use wording such as the following:

Contains Transmitter Module

內含發射器模組:: CCAI16LP1250T6

or any similar wording that expresses the same meaning may be used. The marking must be visible for inspection.

6.4.3 LILY-W132 labeling requirements for end product

When a product integrated with a LILY-W132 module is placed on the Taiwan market, the product must be affixed with a label marking as shown below. The label can use wording such as the following:

Contains Transmitter Module

內含射器模組:: CCAI16LP1280T2

or any similar wording that expresses the same meaning may be used. The marking must be visible for inspection.

6.5 KCC South Korea compliance

The LILY-W132 module is certified by the Korea Communications Commission (KCC).

When a product containing the LILY-W132 module is placed on the South Korean market, the product must be affixed with a label or marking containing the KCC logo and certification number as shown in the figure below. This information must also be included in the product user manuals.

R-C-ULX-LILY-W132

☞ The height of the KCC logo must be at least 5 mm.

7 Antennas

This chapter gives an overview of the different external antennas that can be fitted to the LILY-W1 series module.

⚠ This radio transmitter IC: 8595A-LILYW1 has been approved by Industry Canada to operate with the antenna types listed below with the maximum permissible gain and required antenna impedance for each antenna type indicated. Antenna types not included in this list, having a gain greater than the maximum gain indicated for that type, are strictly prohibited for use with this device.

⚠ Cet émetteur radio IC: 8595A-LILYW1 été approuvé par Industry Canada pour fonctionner avec les types d'antenne énumérés ci-dessous avec le gain maximum autorisé et l'impédance nécessaire pour chaque type d'antenne indiqué. Les types d'antenne ne figurant pas dans cette liste et ayant un gain supérieur au gain maximum indiqué pour ce type-là sont strictement interdits d'utilisation avec cet appareil.

For each antenna, the "Approvals" field defines in which test reports the antenna is included. Definitions of the «Approvals» field are:

- FCC - The antenna is included in the FCC test reports and thus approved for use in countries that accept the FCC radio approvals, primarily US.
- IC - The antenna is included in the IC (Industrie Canada) test reports and thus approved for use in countries that accept the IC radio approvals, primarily Canada.
- RED - The antenna is included in the RED test reports and thus approved for use in countries that accept the RED radio approvals, primarily the European countries.
- MIC - The antenna is included in the Japanese government affiliated MIC test reports and thus approved for use in the Japanese market.
- NCC - The antenna is included in the Taiwan NCC test reports and thus approved for use in Taiwan.

In general, antennas with SMD connection, Reverse Polarity SMA connector or U.FL connector are included in FCC, IC, MIC, NCC and RED radio tests. The antennas with SMA connector are included in MIC, NCC and RED radio tests but not in the FCC or IC due to FCC/IC regulations.

The external antennas are connected to the board through U.FL connectors. Some antennas are connected directly to the U.FL connector of the board while some are connected using an SMA or reversed polarity SMA connector through a short U.FL to SMA or reversed polarity SMA adapter cable. See LILY-W1 series System Integration Manual [2] for information about U.FL connector design.

7.1 Antenna accessories

Name	**U.FL to SMA adapter cable**
Connector	U.FL and SMA jack (outer thread and pin receptacle)
Impedance	50 Ω
Minimum cable loss	0.5 dB, The cable loss must be above the minimum cable loss to meet the regulatory requirements. Minimum cable length 100 mm.
Comment	The SMA connector can be mounted in a panel. See LILY-W1 series System Integration Manual [2] for information how to integrate the U.FL connector.
Approval	RED, NCC and MIC

Name	U.FL to Reverse Polarity SMA adapter cable
Connector	U.FL and Reverse Polarity SMA jack (outer thread and pin)
Impedance	50 Ω
Minimum cable loss	0.5 dB, The cable loss must be above the minimum cable loss to meet the regulatory requirements. Minimum cable length 100 mm.
Comment	The Reverse Polarity SMA connector can be mounted in a panel. See LILY-W1 series System Integration Manual [2] for information how to integrate the U.FL connector. It is required to followed this reference design to comply with the LILY-W1 FCC/IC modular approvals.
Approval	FCC, IC, MIC, NCC and RED

7.2 Approved antennas

7.2.1 Single band antennas

Ex-IT 2400 RP-SMA 28-001	
Manufacturer	ProAnt
Polarization	Vertical
Gain	+3.0 dBi
Impedance	50 Ω
Size	Ø 12.0 x 28.0 mm
Type	Monopole
Connector	Reverse Polarity SMA plug (inner thread and pin receptacle).
Comment	This antenna requires to be mounted on a metal ground plane for best performance. To be mounted on the U.FL to Reverse Polarity SMA adapter cable. An SMA version antenna is also available but not recommended for use (Ex-IT 2400 SMA 28-001).
Approval	FCC, IC, MIC, NCC and RED

ANT-2.4-CW-RH-RPS	
Manufacturer	Linx
Polarization	Vertical
Gain	-1.0 dBi
Impedance	50 Ω
Size	Ø 7.4 x 27.0 mm
Type	Monopole
Connector	Reverse Polarity SMA plug (inner thread and pin receptacle).
Comment	To be mounted on the U.FL to Reverse Polarity SMA adapter cable. An SMA version antenna is also available but not recommended for use (ANT-2.4-CW-RH-SMA).
Approval	FCC, IC, MIC, NCC and RED

Ex-IT 2400 MHF 28

Manufacturer	ProAnt
Polarization	Vertical
Gain	+2.0 dBi
Impedance	50 Ω
Size	Ø 12.0 x 28.0 mm
Type	Monopole
Cable length	100 mm
Connector	U.FL. connector
Comment	This antenna requires to be mounted on a metal ground plane for best performance. To be mounted on a U.FL connector. See LILY-W1 series System Integration Manual [2] for information how to integrate the U.FL connector. It is required to followed this reference design to comply with the LILY-W1 FCC/IC modular approvals.
Approval	FCC, IC, MIC, NCC and RED

Ex-IT 2400 RP-SMA 70-002

Manufacturer	ProAnt
Polarization	Vertical
Gain	+3.0 dBi
Impedance	50 Ω
Size	Ø 10 x 83 mm
Type	Monopole
Connector	Reverse Polarity SMA plug (inner thread and pin receptacle)
Comment	To be mounted on the U.FL to Reverse Polarity SMA adapter cable. An SMA version antenna is also available but not recommended for use (Ex-IT 2400 SMA 70-002).
Approval	FCC, IC, MIC, NCC and RED

Ex-IT 2400 MHF 70-001

Manufacturer	ProAnt
Polarization	Vertical
Gain	+3.0 dBi
Impedance	50 Ω
Size	Ø 9.4 x 70.5 mm
Type	Monopole
Cable length	100 mm
Connector	U.FL. connector
Comment	To be mounted on a U.FL connector. See LILY-W1 series System Integration Manual [2] for information how to integrate the U.FL connector. It is required to followed this reference design to comply with the LILY-W1 FCC/IC modular approvals.
Approval	FCC, IC, MIC, NCC and RED

InSide-2400

Manufacturer	ProAnt
Gain	+3.0 dBi
Impedance	50 Ω
Size	27 x 12 mm (triangular)
Type	Patch
Cable length	100 mm
Connector	U.FL. connector
Comment	Should be attached to a plastic enclosure or part for best performance. To be mounted on a U.FL connector. See LILY-W1 series System Integration Manual [2] for information how to integrate the U.FL connector. It is required to followed this reference design to comply with the LILY-W1 FCC/IC modular approvals.
Approval	FCC, IC, MIC, NCC and RED

FlatWhip-2400

Manufacturer	ProAnt
Gain	+3.0 dBi
Impedance	50 Ω
Size	Ø 50.0 x 30.0 mm
Type	Monopole
Connector	SMA plug (inner thread and pin)
Comment	To be mounted on the U.FL to SMA adapter cable.
Approval	RED, NCC and MIC

Outside-2400

Manufacturer	ProAnt
Gain	+3.0 dBi
Impedance	50 Ω
Size	36.0 x 18.0 x 16.0 mm
Type	Patch
Cable length	70 mm
Connector	U.FL. connector
Comment	To be mounted on a U.FL connector. See LILY-W1 series System Integration Manual [2] for information how to integrate the U.FL connector. It is required to followed this reference design to comply with the LILY-W1 FCC/IC modular approvals.
Approval	FCC, IC, MIC, NCC and RED

7.2.2 Dual-band antennas

InSide-WLAN

Manufacturer	ProAnt
Gain	+3.0 dBi
Impedance	50 Ω
Size	27 x 12 mm (triangular)
Type	Patch
Cable length	100 mm
Connector	U.FL. connector
Comment	Should be attached to a plastic enclosure or part for best performance. Dual-band (2.4 GHz / 5 GHz) antenna to be mounted on a U.FL connector. See LILY-W1 series System Integration Manual [2] for information how to integrate the U.FL connector. It is required to followed this reference design to comply with the LILY-W1 FCC/IC modular approvals.
Approval	FCC, IC, MIC, NCC and RED

InSide-WLAN Square

Manufacturer	ProAnt
Gain	+3.0 dBi
Impedance	50 Ω
Size	24x22x1 mm with mounting hole
Type	Patch
Cable length	100 mm
Connector	U.FL. connector
Comment	Should be attached to a plastic enclosure or part for best performance. Dual-band (2.4 GHz / 5 GHz) antenna to be mounted on a U.FL connector. See LILY-W1 series System Integration Manual [2] for information how to integrate the U.FL connector. It is required to followed this reference design to comply with the LILY-W1 FCC/IC modular approvals.
Approval	FCC, IC, MIC, NCC and RED

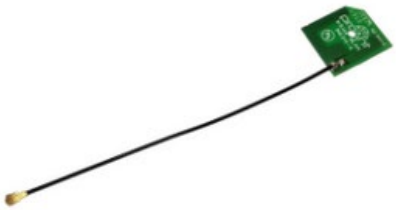

Ex-IT WLAN RPSMA

Manufacturer	ProAnt
Polarization	Vertical
Gain	+3 dBi
Impedance	50 Ω
Size	107 mm (Straight)
Type	Monopole
Connector	Reverse Polarity SMA plug (inner thread and pin receptacle)
Comment	To be mounted on the U.FL to Reverse Polarity SMA adapter cable.
Approval	FCC, IC, MIC, NCC and RED

8 Product handling

8.1 Packaging

The LILY-W1 series modules are delivered as hermetically sealed, reeled tapes to enable efficient production, production lot set-up and tear-down. For more information about packaging, see the u-blox Package Information Guide [1].

8.1.1 Reels

LILY-W1 modules are deliverable in quantities of 500 pieces on a reel. The modules are delivered on the reel Type A3 as described in u-blox package information guide [1].

8.1.2 Tapes

Figure 7 shows the position and orientation of LILY-W132 modules as they are delivered on tape. The dimensions of the tapes are specified in Figure 8. LILY-W131 also has the same orientation as shown in Figure 7 and is delivered on tape.

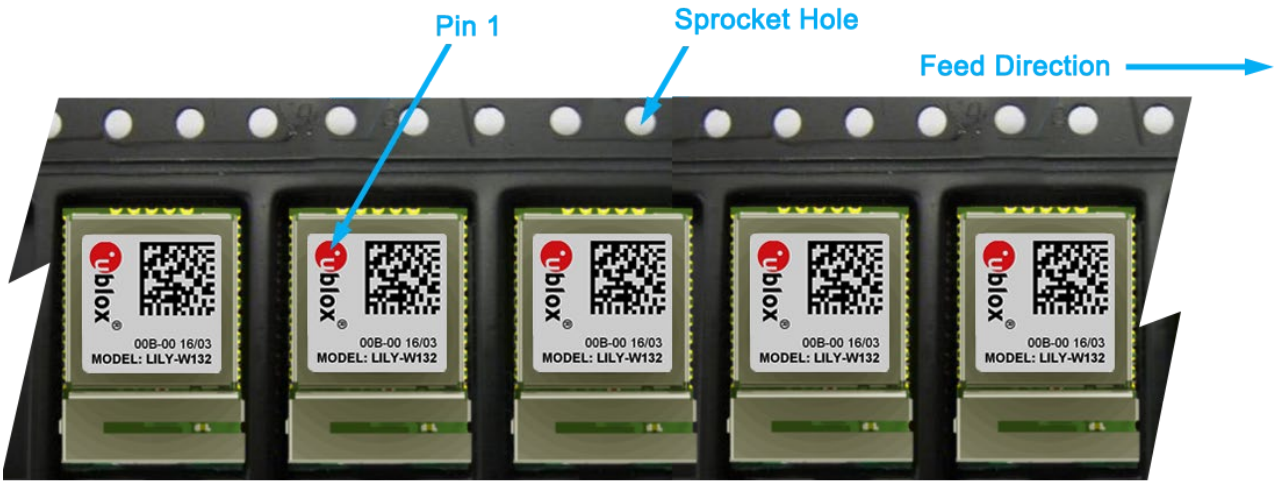

Figure 7: Orientation of LILY-W132 modules on tape

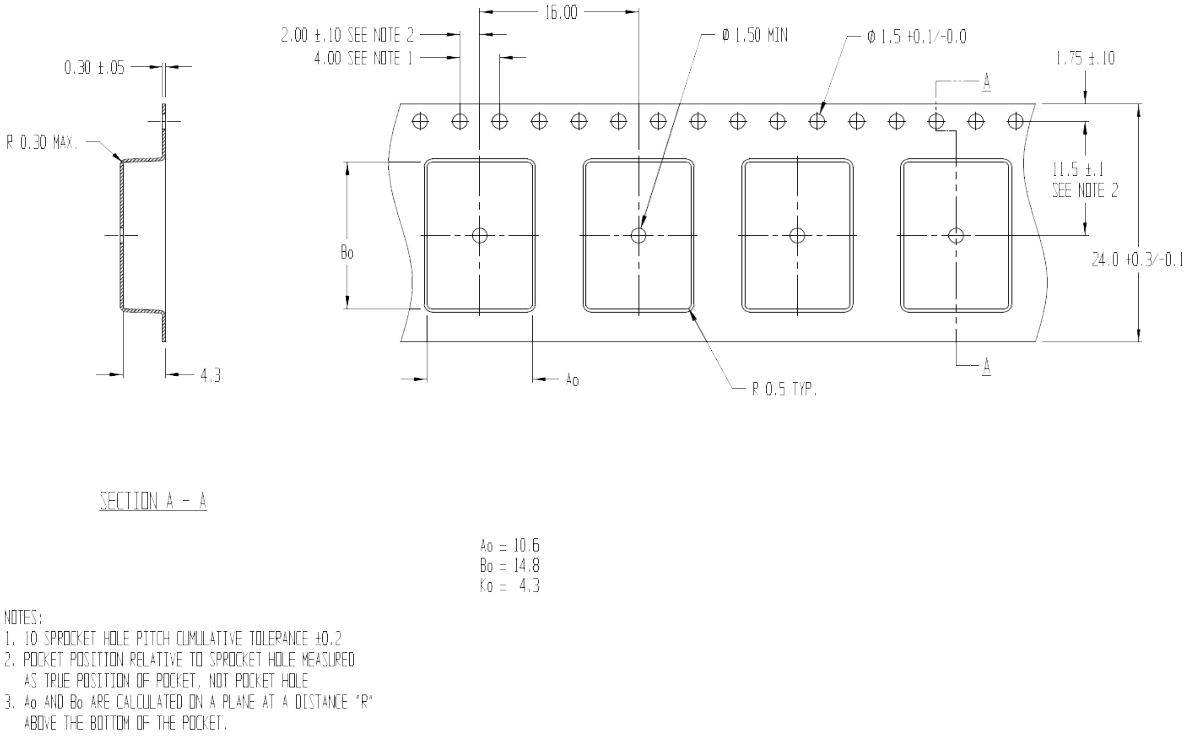

Figure 8: LILY-W1 series tape dimensions

8.2 Moisture sensitivity levels

⚠ The LILY-W1 series modules are Moisture Sensitive Devices (MSD) in accordance with the IPC/JEDEC specification.

The Moisture Sensitivity Level (MSL) relates to the required packaging and handling precautions. The LILY-W1 series modules are rated at MSL level 4. For more information regarding moisture sensitivity levels, labeling and storage, see the u-blox Package Information Guide [1].

☞ For MSL standards, see IPC/JEDEC J-STD-020, which can be downloaded from www.jedec.org.

8.3 Reflow soldering

Reflow profiles must be selected in accordance with u-blox recommendations. See the LILY-W1 series system integration manual [2] for more information.

LILY-W131-00B and LILY-W132-00B comply with one time reflow and LILY-W131-10B and LILY-W132-10B comply with two.

⚠ Failure to observe these recommendations can result in severe damage to the device.

8.4 ESD precautions

⚠ The LILY-W1 series modules contain highly sensitive electronic circuitry and are Electrostatic Sensitive Devices (ESD). Handling the LILY-W1 series modules without proper ESD protection may destroy or damage them permanently.

The LILY-W1 series modules are electrostatic sensitive devices (ESD) and require special ESD precautions typically applied to ESD sensitive components. Section 4.1.1 provides the maximum ESD ratings of the LILY-W1 series modules.

Proper ESD handling and packaging procedures must be applied throughout the processing, handling and operation of any application that incorporates the LILY-W1 series module. The ESD precautions should be implemented on the application board where the module is mounted.

⚠ Failure to observe these recommendations can result in severe damage to the device.

9 Labeling and ordering information

9.1 Product labeling

The labels of the LILY-W1 series modules include important product information as described in this section. Figure 9 illustrates the label of LILY-W1 series modules, which includes product type number and revision, production date, Data Matrix with unique serial number and MAC address, u-blox logo, and certification numbers (if applicable).

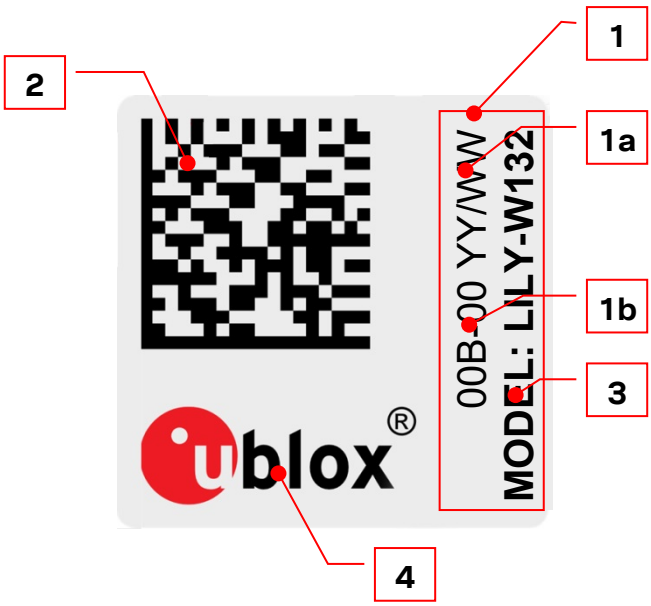

Figure 9: Data available on the LILY-W1 series label

Reference	Description
1	Text box containing product name, version and date of production.
1a	Date of production encoded YY/WW (year/week)
1b	Product version
2	Data Matrix with unique serial number of 19 alphanumeric symbols. The 3 first symbols represent the unique module type no. 549: LILY-W131 and 550: LILY-W132, the next 12 symbols represent the unique hexadecimal Wi-Fi MAC address of the module AABBCCDDEEFF, and the last 4 symbols represent the hardware and firmware version encoded HHFF. See section 1.7 for more information about MAC addresses.
3	Text MODEL: and Product name (ID)
4	u-blox logo, the red dot in the logo is also marking pin no 1

Table 19: LILY-W1 series label description

9.2 Explanation of codes

Three different product code formats are used. The **Product Name** is used in documentation such as this data sheet and identifies all u-blox products, independent of packaging and quality grade. The **Ordering Code** includes options and quality, while the **Type Number** includes the hardware and firmware versions. Table 20 explains these three different formats:

Format	Structure
Product Name	PPPP-TGVV
Ordering Code	PPPP -TGVV-TTQ
Type Number	PPPP -TGVV-TTQ-XX

Table 20: Product code formats

Table 21 explains the parts of the product code.

Code	Meaning	Example
PPPP	Form factor	LILY
TG	Platform (Technology and Generation) T – Dominant technology, For example, W: Wi-Fi, B: Bluetooth® G - Generation	W1
VV	Variant based on the same platform; range [00…99]	31
TT	Major Product Version	00
Q	Quality grade A: Automotive B: Professional C: Standard	B
XX	Minor product version (not relevant for certification)	00

Table 21: Part identification code

9.3 Ordering information

Ordering Code	Product
LILY-W131-00B	LILY-W1 module with antenna pin
LILY-W131-10B	LILY-W1 module with antenna pin and 2 solder reflows
LILY-W132-00B	LILY-W1 module with internal antenna and LTE filter
LILY-W132-10B	LILY-W1 module with internal antenna and LTE filter and 2 solder reflows

Table 22: Product ordering codes

Appendix

A Glossary

Abbreviation	Definition
ADC	Analog to digital converter
BPF	Band pass filter
CAN	Controller area network
CTS	Clear to send
DC	Direct current
DSR	Data set ready
DTR	Data terminal ready
EIRP	Effective isotropic radiated power
GND	Ground
GPIO	General purpose input/output
H	High
I	Input (means that this is an input port of the module)
IEEE	Institute of Electrical and Electronics Engineers
I^2C	Inter-integrated circuit
L	Low
LPO	Low power oscillator
MIMO	Multi-input multi-output
MSD	Moisture sensitive device
N/A	Not applicable
O	Output (means that this is an output port of the module)
PCN/IN	Product change notification / Information note
PD	Pull-down
PU	Pull-up
RMII	Reduced media independent interface
RTS	Request to send
RXD	Receive data
SDIO	Secure digital input output
SPI	Serial peripheral interface
TXD	Transmit data
UART	Universal asynchronous Receiver/Transmitter
USB	Universal serial bus

Table 23: Explanation of the abbreviations and terms used

Related documents

[1] u-blox package information guide, UBX-14001652
[2] LILY-W1 system integration manual, UBX-15027600
[3] EVK-LILY-W1 user guide, UBX-15030290
[4] LILY-W1 declaration of conformity, UBX-16015108

☞ For product change notifications and regular updates of u-blox documentation, register on our website, www.u-blox.com.

Revision history

Revision	Date	Name	Comments
R01	4-Jan-2016	mwej	Initial release.
R02	01-Mar-2016	mwej	Added Wi-Fi characteristics (Table 2, Table 14, and Table 16) and power consumption characteristics (Table 9 and Table 10). Updated block diagram (Figure 1). Updated product label (Figure 9).
R03	08-Apr-2016	mwej	Document status changed to Advance Information. Added LILY-W132 LTE characteristics (section 4.2.8). Minor correction in the mechanical drawing - Figure 5 (antenna tolerances). Added section with additional MAC address description (section 1.7). Added description of the Data Matrix on the label (section 9.1). Removed Japan (MIC) from planned type approval countries.
R04	18-Jul-2016	mwej	Document status changed to Early Production Information. Removed last bit info in the stored MAC address (section 1.7). Updated Internal antenna with design recommendations (Section 2.2.1). Updated Maximum ESD ratings (Table 6). Updated Wi-Fi Transmit Characteristics (section 4.2.9). Added type approval information (ETSI, FCC and IC) (Section 6). Added information about approved antennas (Section 7).
R05	11-Oct-2016	mwej, kgom	Added Japan certification information (section 6.3 and in chapter 7). Included antenna type as one of the fields in Single band and dual-band antennas (section 7.2). Removed the information in European Union regulatory compliance (section 6.1) and provided reference to LILY-W1 Declaration of Conformity (UBX-16015108). Maximum allowed conducted power table moved to SIM (sec. 4.2.9).
R06	14-Sep-2017	mwej, sbia, shoe, kgom	Improved the information about inner pads in the pin assignment section (Figure 3 and Table 4). Added Taiwan certification information in section 6.4, chapters 1 and 7. Updated section 6 and section 7 with respect to RED certification. Replaced document status with disclosure restriction.
R07	15-Nov-2017	lalb	Changed the product status to Mass production.
R08	23-Oct-2019	kgom, lalb, fkru, mwej	Updated Table 1. Updated the RoHS compliance to Directive 2015/863/EU (RoHS 3) (section 6.1.1). Added South Korea certification information (section 6.5). Corrected type description of Ex-IT WLAN RPSMA antenna (section 7.2.2).
R09	16-Dec-2020	lber	Added LILY-W131-10B and LILY-W132-10B module variants in the product table and referenced these as module variants that allow two solder reflows in section 8.3.
R10	20-May-2021	mzes	Included previously incorrect Type numbers in document applicability table and updated in Contact list.

Contact

For complete contact information, visit us at www.u-blox.com.

u-blox Offices

North, Central and South America

u-blox America, Inc.

Phone: +1 703 483 3180
E-mail: info_us@u-blox.com

Regional Office West Coast:

Phone: +1 408 573 3640
E-mail: info_us@u-blox.com

Technical Support:

Phone: +1 703 483 3185
E-mail: support@u-blox.com

Headquarters
Europe, Middle East, Africa

u-blox AG

Phone: +41 44 722 74 44
E-mail: info@u-blox.com
Support: support@u-blox.com

Asia, Australia, Pacific

u-blox Singapore Pte. Ltd.

Phone: +65 6734 3811
E-mail: info_ap@u-blox.com
Support: support_ap@u-blox.com

Regional Office Australia:

Phone: +61 3 9566 7255
E-mail: info_anz@u-blox.com
Support: support_ap@u-blox.com

Regional Office China (Beijing):

Phone: +86 10 68 133 545
E-mail: info_cn@u-blox.com
Support: support_cn@u-blox.com

Regional Office China (Chongqing):

Phone: +86 23 6815 1588
E-mail: info_cn@u-blox.com
Support: support_cn@u-blox.com

Regional Office China (Shanghai):

Phone: +86 21 6090 4832
E-mail: info_cn@u-blox.com
Support: support_cn@u-blox.com

Regional Office China (Shenzhen):

Phone: +86 755 8627 1083
E-mail: info_cn@u-blox.com
Support: support_cn@u-blox.com

Regional Office India:

Phone: +91 80 405 092 00
E-mail: info_in@u-blox.com
Support: support_in@u-blox.com

Regional Office Japan (Osaka):

Phone: +81 6 6941 3660
E-mail: info_jp@u-blox.com
Support: support_jp@u-blox.com

Regional Office Japan (Tokyo):

Phone: +81 3 5775 3850
E-mail: info_jp@u-blox.com
Support: support_jp@u-blox.com

Regional Office Korea:

Phone: +82 2 542 0861
E-mail: info_kr@u-blox.com
Support: support_kr@u-blox.com

Regional Office Taiwan:

Phone: +886 2 2657 1090
E-mail: info_tw@u-blox.com
Support: support_tw@u-blox.com